RAM S800 Heavy Picture

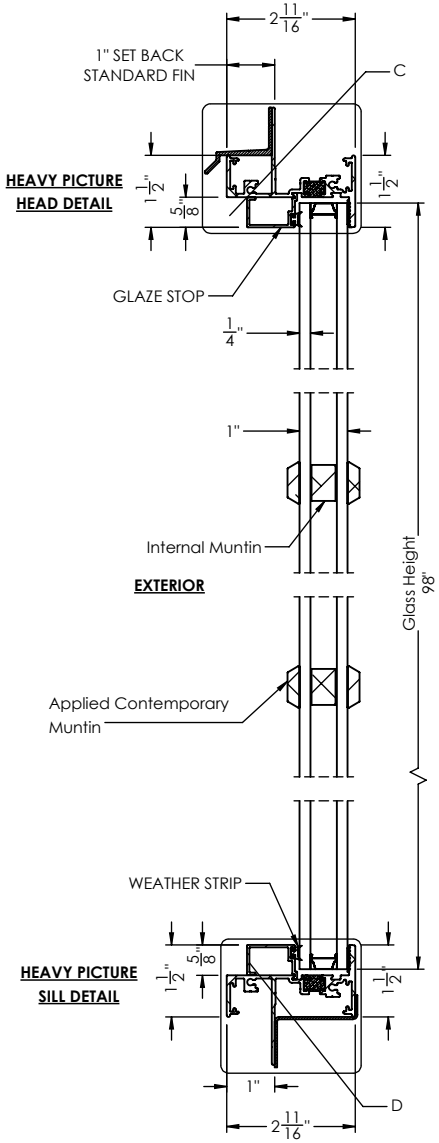

SECTION A-A
SCALE 1 : 4

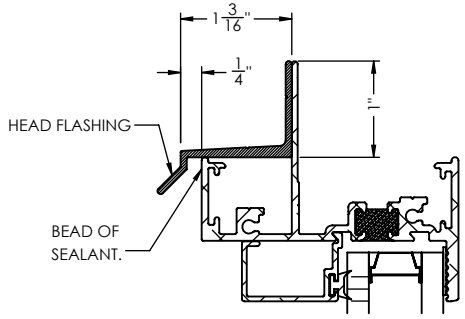

DETAIL C
SCALE 1 : 2

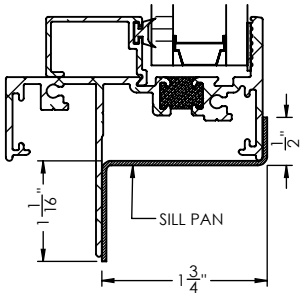

DETAIL D
SCALE 1 : 2

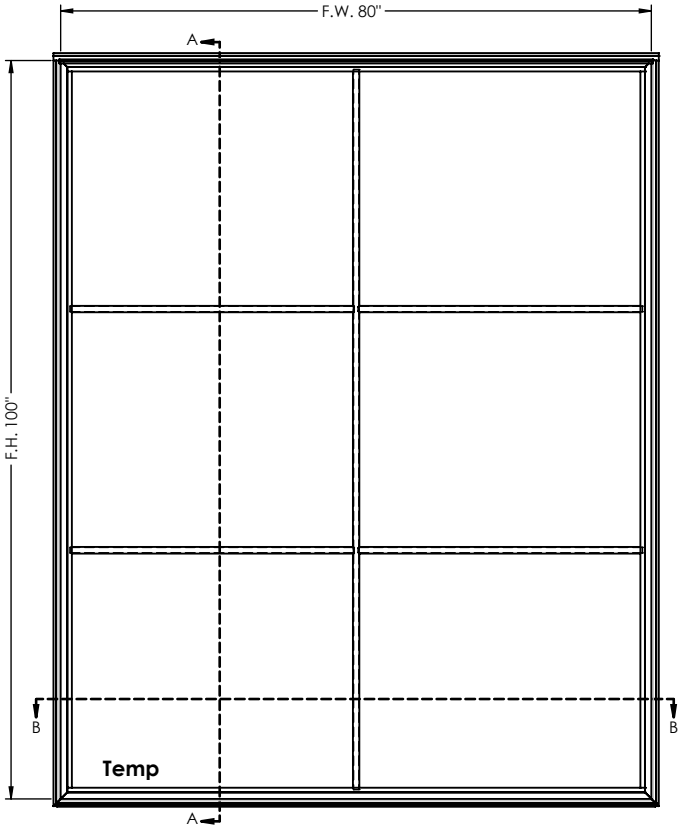

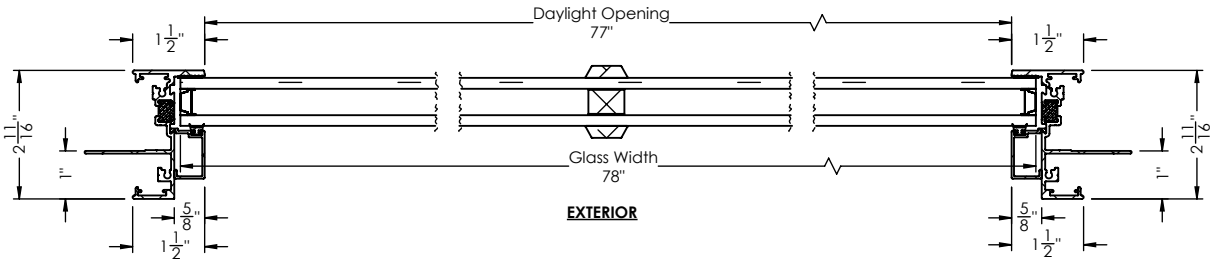

HEAVY PICTURE
LEFT JAMB DETAIL

SECTION B-B
SCALE 1 : 4

HEAVY PICTURE
RIGHT JAMB DETAIL

REV	DESCRIPTION	BY	DATE
~	~	~	~
~	~	~	~

PROPRIETARY AND CONFIDENTIAL

THE INFORMATION CONTAINED IN THIS DRAWING IS THE SOLE PROPERTY OF RAM INDUSTRIES. ANY REPRODUCTION IN PART OR AS A WHOLE WITHOUT THE WRITTEN PERMISSION OF RAM INDUSTRIES IS PROHIBITED.

RAM INDUSTRIES

LEAD TIME		WEEKS	CUSTOMER	
GLASS WARRANTY		YEARS	PROJECT	
FRAME WARRANTY		YEARS	CITY	
FINISH WARRANTY		YEARS	STATE	
U-FACTOR			OUTER GLASS	
SHGC			AIR SPACE	
OA GLASS THICKNESS	1"		INNER GLASS	

UNLESS OTHERWISE SPECIFIED:

DIMENSIONS ARE IN INCHES
TOLERANCES:
FRACTIONAL ± 1/16
ANGULAR: MACH/BEND ± .5
TWO PLACE DECIMAL ±.01
THREE PLACE DECIMAL ±.004

MATERIAL
6063-T5
ALUMINUM

DO NOT SCALE DRAWING

	NAME	DATE
DRAWN	CG	8/29/2023
MARK		
QTY.		
FINISH		
DP		

COMMENTS:

RAM INDUSTRIES

TITLE:
RAM S800
Heavy Picture Window

SIZE	DWG. NO.	REV
A	S800 Standard DETAILS	~

SCALE: 1:26 | WEIGHT: 359.11 | SHEET 1 OF 1